Access
Technology
Ireland

Integrated Security Solutions:

- Networked Access Control Solutions.
- Card / Code Access Systems.
- I.D. Badge Systems.
- Traffic Barriers.
- Coin / Token Car Parking.
- Turnstiles.
- Gate Automation.
- Automatic Door Operators.
- Electric Locking.
- C.C.T.V.
- Intercom Systems.

• Automatic Door Operators – Model DRC

This unit is a compact, self-contained, all electric door operator able to interface with any switching device or building management system, providing maximum flexibility of design.

Door opening and closing is always under the direct control of the high-quality motor drive and the on-board microprocessor. All commands are performed directly and positively, with none of the delays associated with other types of mechanisms.

The operator is suitable for both internal and external doors. It will interface directly with touch switches, proximity switches, PIR sensors and pressure mats, making it ideal for situations involving the disabled or those hampered by loads. It will also interface with all forms of electronic access control systems, entryphone systems and remote releases.

Key Features

- All electric – easy to fit.
- Simple interface with external controls – maximum flexibility.
- Intelligent micro-processor control – user friendly operation.
- Suits all combinations of access / security – easy to add to existing system.
- Low maintenance – reduces operating costs and downtime.
- Available in single door or double door versions.

design, installation and commissioning of integrated security systems.

General Specification

Load Capacity

Door width up to	Max door weight
0.8 m	250 Kg
1.0 m	200 Kg
1.2 m	150 Kg

- Max power consumption – 150W.
- Max trust – 40Nm.
- Max current – 6.5A / Nominal current – 2A..
- Battery – powered emergency back-up.
- Door hold / open time – adjustable between 2 – 12 secs.
- Voltage – 230 V.

Selectable functions

- Push and Go system.
- Detection of obstacles.
- Temporary Stop.
- Wind Stop safety system.
- Step Command.

Options and Accessories

- Slide Arm (Pull Slide – Transom Mount).
- Articulated Arm (Push Slide – Transom Mount).
- Single or double door version.
- Non Handed.
- PIR Detectors, Presence Sensors, Actuators, and general Access Control accessories.

Technical Specification

Slide Arm (Pull Side)

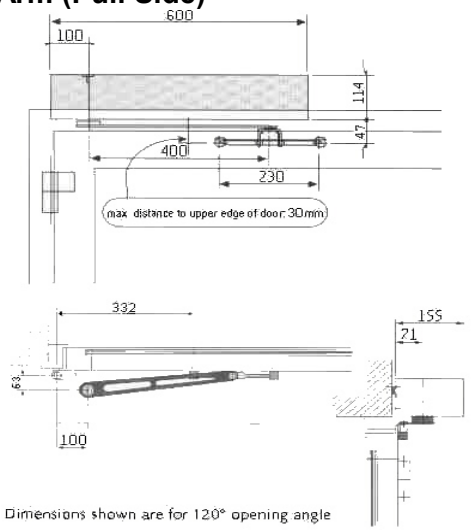

Articulated Arm (Push Side)

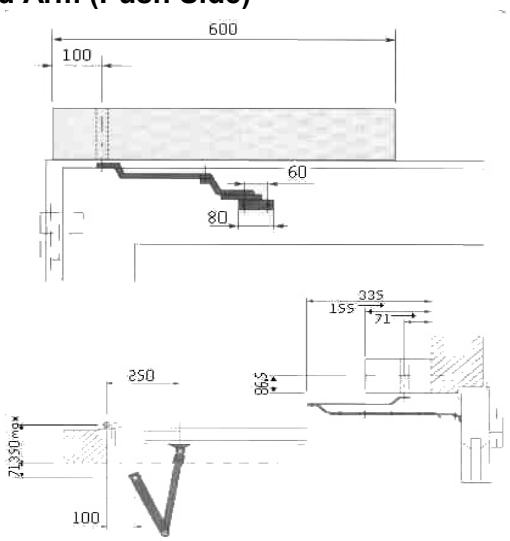

Belfast Office:

A.T.(Ireland) Ltd
24 Mallusk Enterprise Park
Newtownabbey
Co. Antrim
BT36 4GN

Tel: +44 (0)28 9083 6622
Fax: +44 (0)28 9084 4588

Website: http://www.atireland.co.uk

E-mail: office@atireland.co.uk

Dublin Office:

A.T.(Ireland) Ltd
9 Ashford Downs
Ashford
Co. Wicklow

Freephone: 1800 284283
Tel: 0404 42041
Fax: 048 9084 4588